ENGINE POWER
1.411 kW / 1.892 HP @ 1.800 rpm

OPERATING WEIGHT
max. 220.550 kg

BUCKET CAPACITY
18,0 - 35,0 m³

KOMATSU

WA1200-6

WA
1200

WHEEL LOADER

WA1200-6

WALK-AROUND

Excellent Operator Environment

- Automatic transmission with ECMV (Electronically Controlled Modulation Valve)
- AJSS (Advanced Joystick Steering System)
- Engine RPM set system with auto decel
- Variable transmission cut-off system
- Roomy, quiet cab with power windows
- Low vibration & noise
- Pillar-less large cab with ROPS/FOPS canopy
- Comfortable operator's seat
- Trainer seat (optional)

See pages 10 and 11.

High Productivity & Low Fuel Consumption

- High performance SSDA16V160E-2 engine
- Low fuel consumption
- The largest bucket in its class
- Extra dumping clearance and reach
- Hi-cab
- Remote boom positioner
- Selectable traction power

See pages 4,5,6 and 5.

Harmony with Environment

- EPA Tier 2 emission certified
- Low fuel consumption

WA1200-6

ENGINE POWER
1.411 kW / 1.892 HP @ 1.800 rpm

OPERATING WEIGHT
max. 220.550 kg

BUCKET CAPACITY
18,0 - 35,0 m³

High Reliability & Durability

- Reliable Komatsu designed and manufactured components
- High-rigidity frames
- Low maintenance brake system
- Hydraulic hoses use flat face o-ring seals

See pages 8 and 9.

- Cation electrodeposition process is used to apply primer paint
- Powder coating process is used to apply main structure paint
- Sealed DT connectors for electrical connections

Photo may include optional equipment.

Easy Maintenance

- Tire saver
- Long oil replacement interval
- Oil sealed loader linkage pins
- Centralized filter layout
- Quick fluid change-out system

See pages 12 and 13.

- Auto-greasing system
- EMMS (Equipment Management Monitoring System)
- KOMTRAX Plus
- Maintenance accessibility
- Safety features
- Rear access stairs

HIGH PRODUCTIVITY AND LOW FUEL CONSUMPTION

High Performance SSDA16V160E-2 Engine

Economical Komatsu SSDA16V160E-2 diesel engine provides power with reserve margins to move giant **20.0 m³** 26.2 yd³ loads. Equipped with an electronic governor for low fuel consumption and electronic acceleration pedal and rpm set for easy operation.

Net power: 1316 kW 1765 HP
Max torque: 8.15 kNm 831 kgfm 6,010 ft lb

The Largest Bucket in Its Class

The WA1200-6 is equipped with the largest bucket in its class at **20.0 m³** 26.2 yd³. Komatsu's bucket is designed for easy loading with little spillage. This, combined with the highest traction and breakout force available, makes a loader which achieves high bucket fill factors and maximum production, able to outproduce other loaders.

Bucket capacities
20.0 m³ 26.2 cu.yd

Low Emission Engine

This engine is EPA Tier 2 emission certified without sacrificing power or machine productivity.

Low Fuel Consumption

Low fuel consumption is achieved because of the low-noise, high-torque engine and the large-capacity torque converter with maximum efficiency in the low-speed range.

Boom	Bucket	Dump Clearance	Dump Reach
Standard Boom	**20.0 m³** 26.2 yd³	**6305 mm** 20'8"	**2890 mm** 9'6"
High Lift Boom (optional)	**18.0 m³** 23.5 yd³	**7065 mm** 23'2"	**2930 mm** 9'7"

Hi-cab

To enhance the loading performance when using larger buckets with the extra dumping clearance and reach, the hi-cab is standard equipment. From his vantage point, **6380 mm** 20‘11“ from the ground, the seated operator has a safe, unobstructed full view of the bucket and the inside of a 220-tonne truck body.

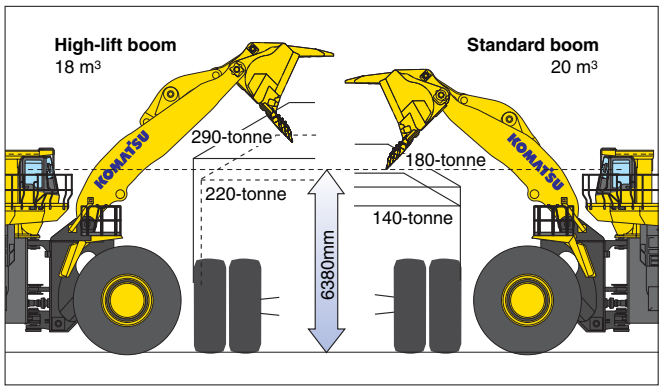

Matching with Dump Trucks

Aggressive loading and maximum fill factors lead to exceptional productivity in the toughest mining conditions.

The WA1200-6 equipped with a **20.0 m³** 26.2 yd³ bucket can load a 140-tonne truck in four passes. Due to its extra dumping clearance and reach it is able to load 180-tonne trucks in five passes. The high lift version can load 290-tonne plus trucks.

Boom \ Truck	140-tonne	180-tonne	220-tonne	290-tonne
Standard Boom	4 passes	5 passes	6 passes	—
High Lift Boom (optional)	—	—	7 passes	8 passes

HIGH PRODUCTIVITY AND LOW FUEL CONSUMPTION

High Breakout Force / Traction Force

Komatsu wheel loaders have high-tensile steel Z-bar loader linkages for maximum rigidity and maximum breakout force. Sealed loader linkage pins extend greasing intervals.

Breakout force:

1275 kN 130000 kg 286,600 lb

20.0 m³ 26.2 yd³ Rock bucket (spade nose with teeth)

Traction force:

992 kN 101200 kg 223,100 lb

Excellent Stability

The WA1200-6 has the widest tread in its class **4,300mm** (14'1") and a long **7,100mm** (23'4") wheelbase, for maximum machine stability.

Static tipping load

(with 60/80 R57 tires / bucket **20.0 m³** 26.2 yd³)

Straight: 121930 kg 268,800 lb

40° full turn: 107060 kg 236,000 lb

Remote Boom Positioner

The highest and lowest position of the bucket can be set from the operator's seat to match the height of any truck body. Where the positioner is set will stop the bucket smoothly without shock.

Selectable Traction Power and Travel Speed

- **Maximum traction control:** Traction can be set at any level within 20 - 100% with the „TRACTION CONTROL DIAL" located on the left front. You can set the maximum traction force according to the condition of the road, material and type of work. It greatly increases fuel efficiency and extends the service life of tires.
- **Maximum speed control:** With the „VEHICLE SPEED DIAL", you can set the maximum vehicle speed of 1st. and 2nd. at any level from 3km/h to max. This means the operator can set the cycle time between the material and the dump truck. As the loading cycle time is shortened, productivity is improved.

Dual-mode Active Working System

This system provides the most efficient hydraulic flow for your operation. The active working switch has two modes: powerful loading or normal loading.

Powerful loading mode

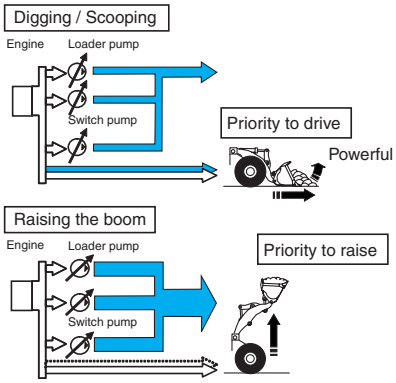

The driving force gets more power for digging and scooping material. The boom is raised faster for shorter cycle times. This combination makes this mode efficient for digging blasted rock or hard ground.

Normal loading mode

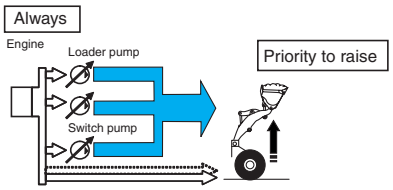

It does not cut off often, so the boom is raised faster. This mode is efficient for loading loose material that does not require traction force.

PNC (Pump Neutral Cut) Control System for Hydraulic Pump

The variable displacement piston pump combined with the PNC (Pump Neutral Cut) system, use only the required amount of oil flow for the work, so it does not waste oil pressure. This function reduces the fuel rate by controlling the pump discharge, when not operating the work equipment.

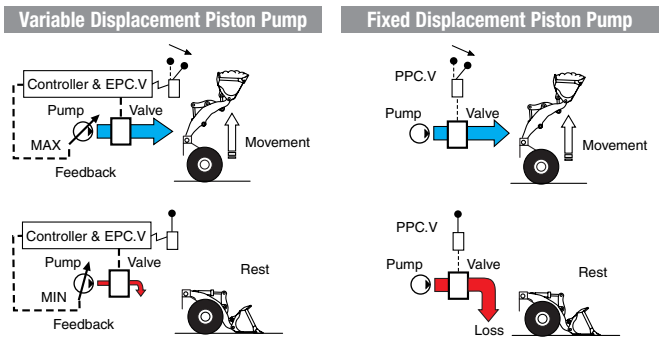

Variable Displacement Steering Pump + CLSS

The variable displacement steering pump, combined with the Closed-center Load Sensing System, delivers just the hydraulic flow the steering requires. This prevents wasted hydraulic pressure and contributes to increased fuel economy.

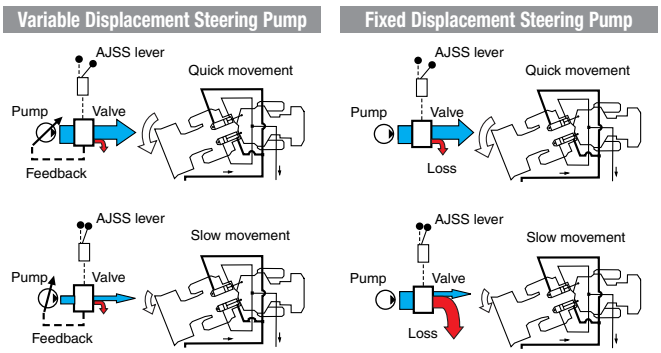

Modulated Clutch System

When approaching the dump truck,

1) The current system requires the engine rpm to be increased to raise the bucket faster. Now, the modulated clutch is controlled automatically to raise the bucket faster, while reducing forward travel speed. This reduction in travel speed eliminates the braking requirement and the time to approach the dump truck is shortened.

2) This combination also reduces torque waste and smooths the operation.

E ↔ P Control of Engine

The engine output function has „2 mode“ of Economy or Power. They are selected and controlled automatically. P mode is selected only when digging and approaching the dump truck. This „2 mode“ engine control contributes not only to the reduction of the fuel rate but also to the improvement of reliability and durability.

HIGH RELIABILITY & DURABILITY

Reliable Komatsu Designed and Manufactured Components

All components within the power train, from bolts to final gearing, are all Komatsu-designed. Komatsu loaders are manufactured with an integrated production system under a strict quality control system.

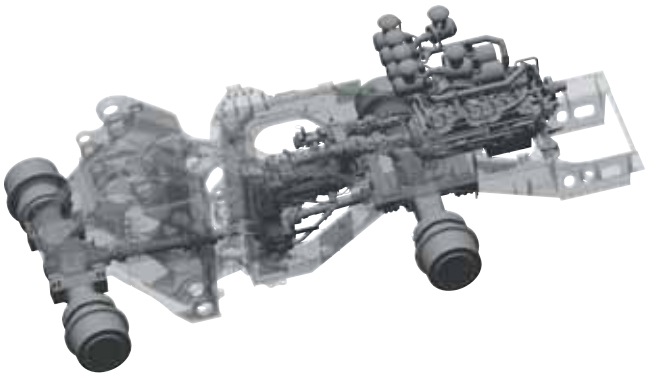

Engine pre-lube System

Engine durability is achieved by raising the oil pressure before starting.
When the key is turned, the pre-lubrication pump sends oil from the pan to the filter. When the set oil pressure is reached, then the starter motor engages to start the engine.

Low Maintenance Brake System

The WA1200-6 uses Komatsu- designed sealed wet disc brakes. This proven design, coupled with a brake oil cooling system, provides reliable and durable final drive braking while downhill traveling with full loads and in all load and carry operations.

High-rigidity Frames and Loader Linkage

The front, rear frames and the loader linkage have increased torsional rigidity for stress resistance. Frame and loader linkage are designed and computer tested for proven strength to accommodate actual working loads.

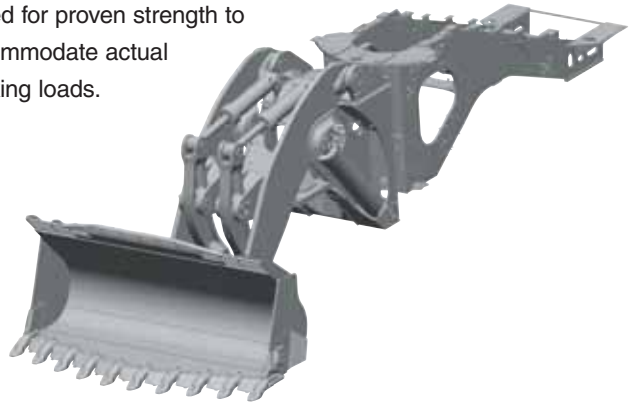

High-rigidity Frame

To increase frame reliability, steel castings have been incorporated at all pivot points to eliminate long weld lengths.

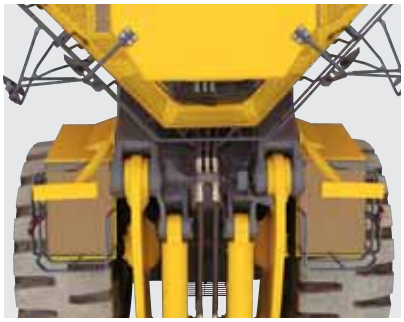

Sealed DT Connectors

Main harnesses and controller connectors are equipped with sealed DT connectors providing high reliability, dust and corrosion resistance.

Flat Face-to-Face O-Ring Seals

Flat face-to-face o-ring seals are used to securely seal hydraulic hose connections and to prevent oil leakage.
In addition, buffer rings are installed to the head side of the all-hydraulic cylinders to lower the load on the rod seals and maximize reliability.

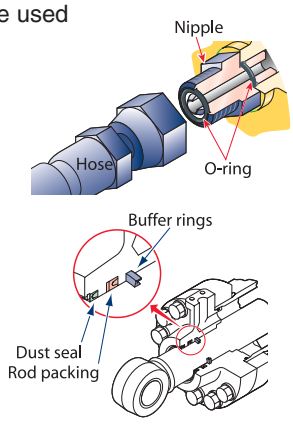

Sweeper Wing (Large size Tire Guard)

To prevent tire damage, the WA1200-6 provides a Sweeper Wing (Large size Tire Guard) on both sides of bucket.

Cation Electrodeposition Primer Paint/ Powder Coating Final Paint

Cation electrodeposition paint is applied as a primer paint and powder coating is applied as topcoat to the exterior sheet metal parts. This process results in a durable paint finish, even in the most severe environments.

Optional Preparation of Teeth According to Usage

- **Hensley teeth:** Teeth of the Hensley company was optional prepared.
- **Large-scale teeth:** Large-scale teeth was optional prepared.

OPERATOR ENVIRONMENT

Easy Operation

Automatic Transmission with ECMV (Electronically Controlled Modulation Valve)

Automatic transmission with ECMV automatically selects the proper gear speed based on travel speed, engine speed, and other travel conditions. The ECMV engages the clutch smoothly to help prevent lag and shock when shifting. This system provides efficient machine operation for a comfortable ride.

- **Kick-down switch:** Powerful scooping is available by shifting down to the 1st. speed, by pressing the kick down switch on the upper boom lever, when the lever is at the 2nd. position.

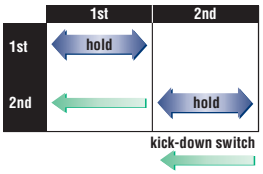

- **Vehicle speed control ON/OFF switch:** By turning the „Vehicle speed control ON/OFF switch“ on the boom lever side to ON, the machine travels with vehicle speed limited to the maximum speed having been set with the „Vehicle speed control ON/OFF switch“. When the „Vehicle speed control switch“ is on, it is indicated by a light under the „Vehicle speed control dial“.

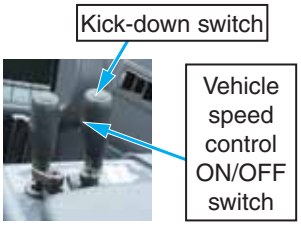

- **Transmission shifting switch:** Manual operation is available by shifting „Transmission shifting switch“ to MANUAL. When traveling on a slope and you do not want to shift gears, you can select the appropriate gear.

AJSS (Advanced Joystick Steering System)

AJSS is a feedback steering system which has been incorporated to allow steering, forward and reverse direction to be controlled by wrist and finger.
With the feedback function, the machine steering angle is exactly the same angle as the lever tilt angle.

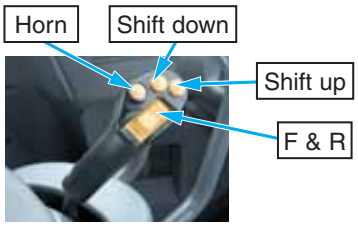

Engine RPM Set System with Auto Decel

Engine Low idle RPM can be easily preset using a push button switch. The system provides auto decel for better fuel consumption.

Variable Transmission Cut-off System

Transmission cut-off position of the left brake pedal is optionally adjustable by switch operation at operator's seat. By adjusting the cut-off position according to the type of work, the inching operation becomes easy and increases efficiency.

1) When loading, adjust the cut-off pressure to low.
Then the impact of braking is low to prevent spillage.

2) When traveling, adjust the cut-off pressure to high.
Load applied to brake will be lighter by using engine brake while decelerating.

1:T/M cut-off ON/OFF switch 3:T/M shifting switch
2:T/M cut-off set switch

Comfortable Operator's Seat

The operator's seat has a reclining/ air suspension design with headrest to support the operator comfortably during long operation. Also, it is easy to adjust seat height with air suspension.

Trainer Seat (optional)

For operator instruction, a trainer seat is offered as an option. The seat belt is attached to the trainer seat the same way as the operator seat. The trainer seat can be folded up when not in use.

Comfortable Operation

Roomy, Quiet Cab with Power Windows

The cab is large, with a comfortably spacious interior and power windows. Also, a wide viewing angle is guaranteed because the cab is pillar-less.
By adopting a high-capacity air conditioner, Komatsu ensures operator comfort, no matter the exterior conditions. Other features designed with operators in mind include a lunchbox storage space.

Lunchbox storage space

Low Vibration & Noise

The cab rests on Komatsu viscous damping mounts (rubber and silicon oil) to reduce vibration and noise.

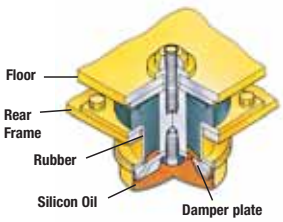

Overhead Panel

Controls for the AM/FM radio, window wiper and washer, cab lights, and air conditioner are all neatly arranged in an overhead console easily within the seated operator's reach.

Pillar-less Large Cab with ROPS / FOPS Canopy

A wide pillar-less flat glass provides excellent front visibility. The wiper arm covers a large area to provide great visibility even on rainy days.

Cab Air Conditioning

Large capacity air conditioning system combined with carefully placed vents provide optimum cool air flow. Defroster vents are designed to keep the rear window frost-free during cold weather operation.
With a simple touch of his hand the operator can easily select from the five operating modes and four fan speeds on the overhead control panel.

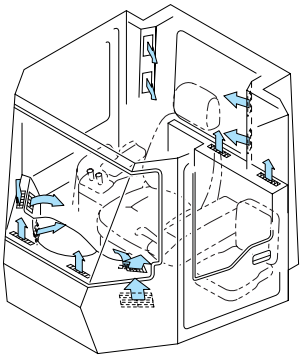

EASY MAINTENANCE

Tire Saver

The tire saver is quite effective for extending the service life of tires. It senses the tire that slips with a speed sensor, then controls the torque converter with the modulated clutch and stops the tire slip.

Long Oil Replacement Interval

Adoption of hybrid elements, that catch the fine and coarse contamination, has extended the interval between replacing elements.

Lubricated Pins for Loader Links

All of the loader links have lubricated pins, for much improved serviceability.

Centralized Filter Layout

Torque converter / transmission oil filters have been centrally located for ease of replacement from the ground.

EMMS (Equipment Management Monitoring System)

Monitor is mounted in front of the operator for easy viewing, allowing the operator to easily check gauges and warning lights.

Fluid Drain from the Ground

Hydraulic oil, transmission/torque converter oil, engine oil, and engine coolant can all be changed from the ground. A fast-fill fuel system is also included as standard equipment.

Auto-Greasing System

Except for the drive shaft, greasing is automatically done to the regular points with a preset amount and interval.

Exhaust Heat Shields

Safety Features

- **Emergency brakes:**
  If the brake oil pressure is too low, the parking brake is automatically engaged for accident prevention.
- **Emergency steering:**
  If the steering pump is disabled, an emergency steering pump provides hydraulic flow.
- **Emergency engine stop switch:**
  The stop switches that operation is possible from the ground are installed in four places and the inside of the cab.

Maintenance Accessibility

For safe maintenance operations, main points are equipped with a step and safety handrail.


Front frame steps


Rear frame steps

Rear Access Stairs

For safely boarding and exiting the machine, rear access stairs with a safety handrail are provided. The step width, clearance and angle have been designed for safety. The step angle has been reduced from 60 to 45 degrees. A step light provides light for night boarding. The emergency ladder is on the right side of the machine.

KOMTRAX Plus

KOMTRAX Plus is a management system for large mining equipment, which enables detailed monitoring of the fleet via satellite. Komatsu and distributors can analyze „vehicle health“, other operating conditions and provide this information to the job site, using the Internet from a remote location, on a near-real time basis. As a result, customers receive timely vehicle maintenance, reduced maintenance expenses, downtime costs and avoid mechanical trouble.

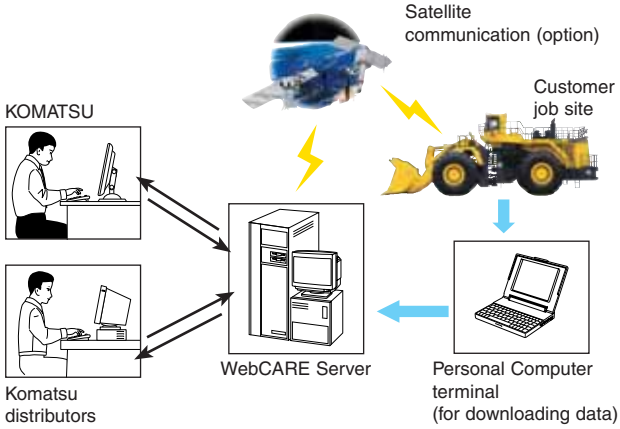

SPECIFICATIONS

ENGINE

Model . . . . . Komatsu SSDA16V160E-2
Type. . . . . Water-cooled, 4-cycle
Aspiration . . . . . Turbocharged and aftercooled
Number of cylinders 16
Bore x stroke. . . . . **159 mm x 190 mm** 6.26“ x 7.48“
Piston displacement . . . . . **60.0 ltr** 3661 in³
Governor . . . . . Electronic fuel control
Engine power
at rated engine speed . . . . . 1800 rpm
ISO 14396 . . . . . **1411 kW** 1892 HP
ISO 9249 (net engine power). . . . . **1316 kW** 1765 HP
Fan drive method for radiator cooling . . . . . Mechanical
Fuel system. . . . . Modular common rail system direct injection
Lubrication system:
Method . . . . . Screw pump, forced lubrication
Filter . . . . . Full-flow
Air cleaner. . . . . Dry-type with double elements and automatic dust evacuation with dust indicator on monitor

TRANSMISSION

Torque converter:
Type . . . . . 3-element, single-stage, single-phase
Transmission:
Type . . . . . Full-powershift, planetary type with modulated clutch
Travel speed: **km/h** mph
Measured with 60/80 R57 tires

	1st	2nd	3rd
Forward	**6.1** 3.8	**11.1** 6.9	**18.7** 11.6
Reverse	**6.3** 3.9	**11.4** 7.1	**19.3** 12.0

AXLES AND FINAL DRIVES

Drive system . . . . . Four-wheel drive
Front . . . . . Fixed, full-floating
Rear. . . . . Center-pin support, full-floating, 16˚ total oscillation
Reduction gear . . . . . Spiral bevel gear
Differential gear. . . . . Straight bevel gear
Final reduction gear . . . . . Planetary gear, double reduction, oil bath

BRAKES

Service brakes . . . . . Hydraulically actuated, wet, multi-disc brakes actuated on four wheels.
Parking brake . . . . . Wet, multi-disc, hydraulically-released, spring applied in the transmission.
Emergency brake . . . . . Parking brake is commonly used

STEERING SYSTEM

Type. . . . . Articulated type, full-hydraulic power steering
Steering angle. . . . . 40˚ each direction
Turning radius outside corner of bucket and teeth . . . **14330 mm** 47‘0“

BUCKET CONTROLS

Control positions
Boom . . . . . Raise, hold, lower, and float
Bucket . . . . . Tilt-back, hold, and dump

HYDRAULIC SYSTEM

Rated capacity (discharge flow) @1800 engine rpm
Loader pump . . . . . **1018 ltr/min** 269 gal/min
Steering pump . . . . . **633 ltr/min** 167 gal/min
Switch pump . . . . . **633 ltr/min** 167 gal/min
Relief valve setting . . . . . **31.4MPa 320 kg/cm²** 4,550 psi
Control valves . . . . . A double spool closed-center hydraulic valve and a steering valve combined with a demand valve to provide optimum flow.

Hydraulic Cylinders	Number of Cylinders	Bore	Stroke
Boom	2	**360 mm** 14.2“	**1835 mm** 72.2“
Bucket	2	**300 mm** 11.8“	**985 mm** 38.8“
Steering	2	**225 mm** 8.9“	**660 mm** 26.0“

Control positions:
Boom . . . . . Raise, hold, lower, and float
Bucket . . . . . Tilt-back, hold, and dump
Hydraulic cycle time (rated load in bucket)
Raise . . . . . 14.8 sec
Dump . . . . . 3.2 sec
Lower (Empty) . . . . . 5.3 sec

ROPS / FOPS & CAB

Structure complies with ISO 3471 ROPS (Roll-Over Protective Structure) standards, as well as ISO 3449 FOPS (Falling Object Protective Structure) standards. The cab is mounted on viscous damping mounts and is well insulated.

SERVICE REFILL CAPACITIES

Cooling system . . . . . **500 ltr** 132 U.S. gal
Fuel tank . . . . . **5100 ltr** 1,347 U.S. gal
Engine . . . . . **280 ltr** 74 U.S. gal
Hydraulic system . . . . . **1300 ltr** 343 U.S. gal
Differential, final drive (each axle). . . . . **670 ltr** 177 U.S. gal
Torque converter and transmission . . . . . **350 ltr** 92 U.S. gal
Brake oil . . . . . **75 ltr** 20 U.S. gal
Brake cooling . . . . . **290 ltr** 77 U.S. gal

TIRES

Select proper tires based on job requirements.
Standard rim size 47.00-57/5.0
Standard tire size 60/80 R57

BUCKET SELECTION GUIDE

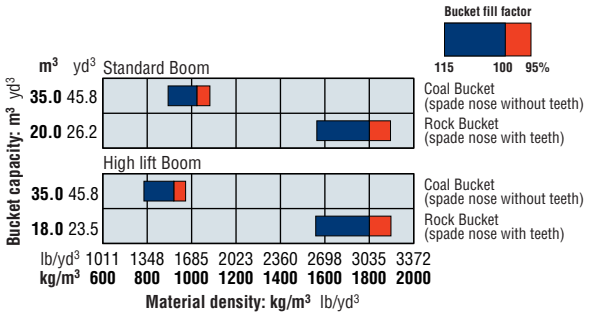

DIMENSIONS

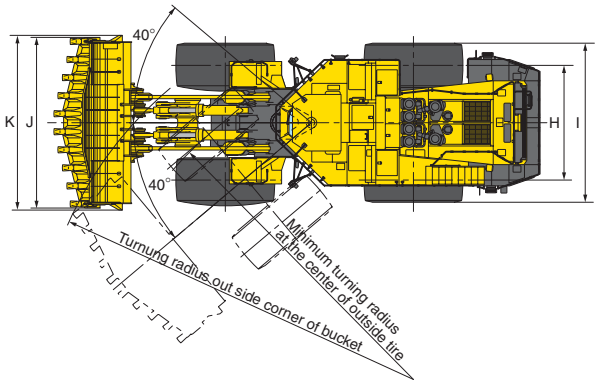

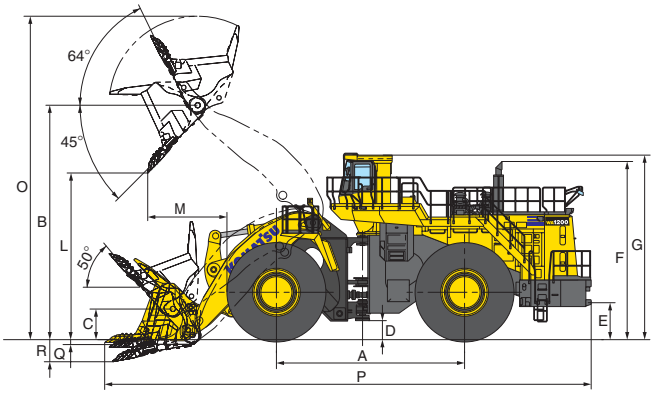

		Standard boom (6200 mm 20'3")				High lift boom (6780 mm 22'2")			
		60/80 R57		58/85-57-84PR		60/80 R57		58/85-57-84PR	
H	Tread	**4300 mm**	14'1"	**4300 mm**	14'1"	**4300 mm**	14'1"	**4300 mm**	14'1"
I	Width over tires	**5820 mm**	19'1"	**5720 mm**	18'9"	**5820 mm**	19'1"	**5720 mm**	18'9"
A	Wheelbase	**7100 mm**	23'4"	**7100 mm**	23'4"	**7100 mm**	23'4"	**7100 mm**	23'4"
B	Hinge pin height, max. height	**8850 mm**	29'0"	**8855 mm**	29'1"	**9540 mm**	31'4"	**9545 mm**	31'2"
C	Hinge pin height, carry position	**1150 mm**	3'9"	**1150 mm**	3'9"	**1350 mm**	4'5"	**1350 mm**	4'5"
D	Ground clearance	**760 mm**	2'6"	**765 mm**	2'6"	**760 mm**	2'6"	**765 mm**	2'6"
E	Hitch height	**1415 mm**	4'8"	**1420 mm**	4'8"	**1415 mm**	4'8"	**1420 mm**	4'8"
F	Overall height, top of the stack	**6735 mm**	22'1"	**6740 mm**	22'1"	**6735 mm**	22'1"	**6740 mm**	22'1"
G	Overall height, ROPS cab	**6970 mm**	22'10"	**6975 mm**	22'11"	**6970 mm**	22'10"	**6975 mm**	22'11"

		Standard boom (6200 mm 20'3")				High lift boom (6780 mm 22'2")			
		60/80 R57		58/85-57-84PR		60/80 R57		58/85-57-84PR	
		Rock Bucket	Coal Bucket	Rock Bucket	Coal Bucket	Rock Bucket	Coal Bucket	Rock Bucket	Coal Bucket
		Spade nose with teeth	Spade nose without teeth	Spade nose with teeth	Spade nose without teeth	Spade nose with teeth	Spade nose without teeth	Spade nose with teeth	Spade nose without teeth
	Bucket capacity: heaped	**20.0 m³** 26.2 yd³	**35.0 m³** 45.8 yd³	**20.0 m³** 26.2 yd³	**35.0 m³** 45.8 yd³	**18.0 m³** 23.5 yd³	**35.0 m³** 45.8 yd³	**18.0 m³** 23.5 yd³	**35.0 m³** 45.8 yd³
	struck	**17.2 m³** 22.5 yd³	**30.2 m³** 39.5 yd³	**17.2 m³** 22.5 yd³	**30.2 m³** 39.5 yd³	**15.0 m³** 19.6 yd³	**30.2 m³** 39.5 yd³	**15.0 m³** 19.6 yd³	**30.2 m³** 39.5 yd³
J	Bucket width	**6400 mm** 21'0"	**6400 mm** 21'0"	**6400 mm** 21'0"	**6400 mm** 21'0"	**6400 mm** 21'0"	**6400 mm** 21'0"	**6400 mm** 21'0"	**6400 mm** 21'0"
K	Bucket width with tire protector	**6550 mm** 21'6"	**–** –	**6550 mm** 21'6"	**–** –	**6550 mm** 21'6"	**–** –	**6550 mm** 21'6"	**–** –
	Bucket weight	**22780 kg** 50,220 lb	**24620 kg** 54,280 lb	**22780 kg** 50,220 lb	**24620 kg** 54,280 lb	**22400 kg** 49,380 lb	**24620 kg** 54,280 lb	**22400 kg** 49,380 lb	**24620 kg** 54,280 lb
L	Dumping clearance, max. height and 45° dump angle	**6305 mm** 20'8"	**6310 mm** 20'8"	**6310 mm** 20'8"	**6315 mm** 20'9"	**7065 mm** 23'2"	**6990 mm** 22'11"	**7070 mm** 23'2"	**6995 mm** 22'11"
M	Reach at max. height and 45° dump angle	**2890 mm** 9'6"	**3030 mm** 9'11"	**2890 mm** 9'6"	**3030 mm** 9'11"	**2930 mm** 9'7"	**3135 mm** 10'3"	**2930 mm** 9'7"	**3135 mm** 10'3"
O	Operating height (fully raised)	**12205 mm** 40'1"	**12980 mm** 42'7"	**12210 mm** 40'1"	**12985 mm** 42'7"	**12785 mm** 41'11"	**13660 mm** 44'10"	**12790 mm** 42'00"	**13665 mm** 44'10"
P	Overall length (bucket ground)	**18310 mm** 60'1"	**18405 mm** 60'5"	**18305 mm** 60'1"	**18400 mm** 60'4"	**18945 mm** 62'2"	**19140 mm** 62'10"	**18940 mm** 62'2"	**19135 mm** 62'9"
	Loader clearance circle *1 (bucket at carry, outside corner of bucket)	**28660 mm** 94'0"	**28640 mm** 94'0"	**28660 mm** 94'0"	**28640 mm** 94'0"	**29230 mm** 95'11"	**29300 mm** 96'2"	**29230 mm** 95'11"	**29300 mm** 96'2"
Q	Digging depth: 0°	**250 mm** 9.8"	**145 mm** 5.7"	**245 mm** 9.6"	**140 mm** 5.5"	**250 mm** 9.8"	**145 mm** 5.7"	**245 mm** 9.6"	**140 mm** 5.5"
R	10°	**785 mm** 30.9"	**700 mm** 27.6"	**780 mm** 30.7"	**695 mm** 27.4"	**770 mm** 30.3"	**685 mm** 27.0"	**765 mm** 30.1"	**680 mm** 26.8"
	Static tipping load: straight	**121930 kg** 268,800 lb	**120530 kg** 265,730 lb	**122530 kg** 270,130 lb	**121130 kg** 267,050 lb	**110950 kg** 244,580 lb	**108850 kg** 239,970 lb	**111550 kg** 245,920 lb	**109450 kg** 241,300 lb
	40° full turn	**107060 kg** 236,000 lb	**105830 kg** 233,320 lb	**107580 kg** 237,180 lb	**106350 kg** 234,460 lb	**97410 kg** 214,760 lb	**95570 kg** 210,700 lb	**97940 kg** 215,920 lb	**96100 kg** 211,860 lb
	Breakout force	**1275 kN** 130000 kgf 286,600 lb	**1029 kN** 105000 kgf 231,500 lb	**1275 kN** 130000 kgf 286,600 lb	**1029 kN** 105000 kgf 231,500 lb	**1236 kN** 126000 kgf 277,780 lb	**1000 kN** 102000 kgf 224,800 lb	**1236 kN** 126000 kgf 277,780 lb	**1000 kN** 102000 kgf 224,800 lb
	Operating weight	**216400 kg** 477,100 lb	**217800 kg** 480,200 lb	**217220 kg** 478,900 lb	**218620 kg** 482,000 lb	**218300 kg** 481,300 lb	**219700 kg** 484,400 lb	**219150 kg** 483,150 lb	**220550 kg** 486,250 lb

*1 Measured with bucket at carry position, outside corner of bucket

All dimensions, weights, and performance values based on SAE J732c and J742b standards.

Static tipping load and operating weight shown include lubricant, coolant, full fuel tank, ROPS canopy, air conditioner, bucket and operator. Machine stability and operating weight are affected by counterweight, or ballast, tire size, and other attachments.
Use either counterweight or ballast, not both. Apply the following weight changes to operating weight and static tipping load.

WEIGHT CHANGES

Tires or attachments	Operating weight		Tipping load straight				Tipping load full turn				Width over tires		Ground clearance		Change in vertical dimensions	
			STD Boom		Hi-lift Boom		STD Boom		Hi-lift Boom							
	kg	lb	kg	lb	kg	lb	kg	lb	kg	lb	mm	ft in	mm	ft in	mm	ft in
60/80 R57	**0**	0	**0**	0	**0**	0	**0**	0	**0**	0	**5820**	19‘1“	**760**	2‘6“	**0**	0
58/85-57-84PR	**+820**	+1810	**+600**	+1320	**+540**	+1190	**+520**	+1150	**+470**	+1040	**5720**	18‘9“	**765**	2‘6“	**+5**	+0.2“

ENVIRONMENT

Engine emissions . . . . . Fully complies with EPA Tier II exhaust emission regulations

Noise levels

LpA operator ear . . . . . 73 dB(A) (ISO 6396 dynamic test)

Vibration levels (EN 12096:1997)*

Hand/arm . . . . . 2,5 m/s² (uncertainty K = 0,46 m/s²)

Body . . . . . 0,5 m/s² (uncertainty K = 0,29 m/s²)

* for the purpose of risk assessment under directive 2002/44/EC, please refer to ISO/TR 25398:2006.

STANDARD EQUIPMENT

- 2-spool valve for boom and bucket controls
- **6200 mm** 20‘4“ boom
- Alternator, **140 A**/24 V
- AM/FM radio
- Air conditioner, heater, defroster & pressurizer
- Automatic greasing system
- Automatic transmission F3 / R3
- Axles, full floating
- Back-up alarm
- Back-up light
- Batteries, **160 Ah**/12 V x 6
- Battery disconnect switch
- Boom kick-out, automatic and adjustable
- Brakes:
  - Service: wet, multiple-disc
  - Parking: wet, multiple-disc
- Bucket positioner
- Cab with ROPS/FOPS canopy
- Converter, **2.5 amps** 12 volt
- Counterweight, standard
- Dualmode active working system
- Electronic display/Multi Monitor
- Emergency brake
- Emergency engine stop switches
- Emergency steering (SAE)
- Engine, Komatsu SSDA16V160E-2 diesel
- EPC fingertip control levers with automatic leveler and positioner
- Fenders, front and left rear
- Floor mat
- Hard water area arrangement (corrosion resister)
- Horn, electric
- KOMTRAX Plus
- Lights
  - Backup light
  - Head lights (4 front)
  - Stop and tail
  - Turn signal with hazard switch (2 front, 2 rear)
  - Working lights (6 front, 8 rear)
  - Access stairs and service area light
- Load meter
- Power windows
- Rear access stairs
- Rearview mirror and rear underview mirror mounted to radiator guard
- Rims, 47.00-57/5.0
- Room mirror
- Seat belt, **76 mm** 3“ with retractor
- Seat, air suspension with reclining
- Starting motor, **9.0 kW**/24 V x 2
- Steering, full hydraulic power (joystick steering control)
- Sun visor
- Tire saver (modulation clutch controlled)
- Vandalism protection kit
- Water separator
- Wiggins fast fuel fill
- Wiggins fast oil fill
- Wind washer, front and rear
- Wipers, front and rear, front intermittent

OPTIONAL EQUIPMENT

- Boom
  - **6780 mm** 22‘2“ boom
- Buckets
  - **20.0 m³** 26.2 yd³ spade nose rock
  - **18.0 m³** 23.5 yd³ spade nose rock (both with ESCO loadmaster system teeth and wear shrouds)
  - **35.0 m³** 45.8 yd³ coal
- Cab glass with internal heat element (front and rear)
- Cold weather arrangement
- Fire extinguisher
- Front fender handrails
- Hensley teeth
- HID working lights
- LED turn signal
- Power train guard
- Radiator core protective grid
- Rear view monitor
- Rims
  - 44.00-57/6.0
  - 47.00-57/6.0
  - 52.00-57/6.0
- Service center
- Trainer seat
- Yellow rotating lamp

Komatsu Europe International NV
Mechelsesteenweg 586
B-1800 VILVOORDE (BELGIUM)
Tel. +32-2-255 24 11
Fax +32-2-252 19 81
www.komatsueurope.com

EESS019800 10/2010