KOMATSU®

WA320-5

FLYWHEEL HORSEPOWER
124 kW 166 HP @ 2000 rpm

OPERATING WEIGHT
13520 – 13710 kg
29,806 – 30,225 lb

BUCKET CAPACITY
2.3 – 3.2 m³ 3.0 – 4.2 yd³

WA 320

WHEEL LOADER

Photo may include optional equipment.

WALK-AROUND

NET HORSEPOWER
124 kW 166 HP @ 2000 rpm

OPERATING WEIGHT
13520 – 13710 kg
29,806 – 30,225 lb

BUCKET CAPACITY
2.3 – 3.2 m³
3.0 – 4.2 yd³

Komatsu-integrated design offers the best value, reliability, and versatility. Hydraulics, powertrain, frame, and all other major components are engineered by Komatsu. You get a machine whose components are designed to work together for higher production, greater reliability, and more versatility.

Reduced operator noise to 70 dB(A)

Expanded main monitor and troubleshooting display

4-Piece sealing with buffer ring in hydraulic cylinders

Larger cab with new layout design

New tilt steering column

Easy-to-operate loader control lever using PPC (Proportional Pressure Control)

Powerful yet efficient Komatsu SAA6D102E-2 ***emissionized engine***

Full side opening gull-wing engine doors

Radial Sealed air cleaner

Swing-out hydraulic radiator fan

Side-by-side type coolers for easy access and cleaning

Overrun protection system

Ground level servicing and fluid checks

Large breakout force

Extremely low fuel consumption

Extended service intervals

Flat face "O-Ring" Hydraulic Seals for extended life

Maintenance-free fully hydraulic wet-disc service and parking brakes

Electronically controlled Hydrostatic Transmission (HST) with variable shift control system

Staircase-type steps with large rear-hinged doors

Sealed DT electrical connectors

Traction control system

Photos may include optional equipment.

PRODUCTIVITY FEATURES

High Productivity and Low Fuel Consumption

Powerful Engine

A powerful SAA6D102E-2 turbocharged air-to-air after-cooled diesel engine provides an output of **124 kW** 166 HP for the WA320-5.

Low Fuel Consumption

The fuel consumption is reduced up to 15% *due to the high-torque engine and Hydrostatic Transmission (HST) with maximum efficiency in the low-speed range.

*V-shape loading (25 sec. cycle time)

Electronically-Controlled HST Using a 1-Pump, 2-Motor System

- The 1-pump, 2-motor system allows for high-efficiency and high tractive effort. Engine power is transmitted hydraulically to a transfer case, then manually out to the differentials and out to the four driving wheels.
- HST provides quick travel response and aggressive drive into the pile. The variable displacement system automatically adjusts to the tractive effort demand to provide maximum power and efficiency.
- Full auto-shifting eliminates any gear shifting and kick-down operation to allow the operator to concentrate on digging and loading.
- When high drive torque is needed for digging, climbing or initiating movement, the pump feeds both motors. This combination makes the loader very aggressive and quick.
- Under deceleration, the HST system acts as a dynamic brake on the mechanical drive system. The dynamic brake can hold the loader in position on most workable slopes. This can be an advantage in stockpiling and ramp loading.
- As the machine moves and gains ground speed, the torque demand decreases and the low speed motor is effectively removed from the drive system by a clutch. At this point, the flow is going to the high-speed motor and the low-speed motor is not causing a drag on the system.
- An inching pedal gives the operator excellent simultaneous control of his travel and equipment hydraulic speeds. By depressing the inching pedal, drive pump flow to the motors will decrease, reducing ground speed and allowing the operator to use his accelerator to increase flow to his equipment hydraulics. Depressing the inching pedal further will activate the service brakes.

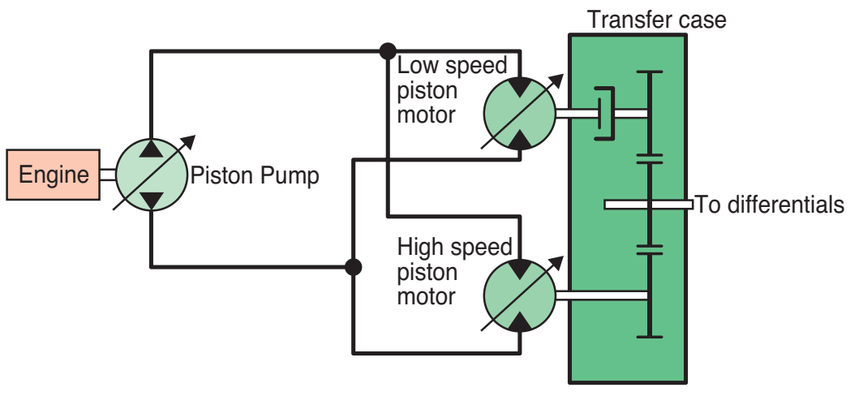

Electronically-Controlled HST with Variable Shift Control System

The operator can choose between first, second, third or fourth maximum speeds by dialing the speed range selector switch.

For v-cycles, the operator can set the speed control switch to 1 or 2, which will give him aggressive digging, quick response and fast hydraulics. For load and carry, he can select 3 or 4 which will still give aggressive digging but with much faster travel speed.

The variable shift switch allows the operator to adjust his machine speed in confined v-loading applications. When in 1, the operator can adjust his travel speed using the variable shift switch to match his machine speed and hydraulics to the distance he must travel.

Traction Control System

In limited traction situations where the operator would like to avoid tire slippage (such as sandy or wet surface operations), he can automatically reduce slippage by activating the traction control feature. Putting the traction control switch in the "ON" position limits the maximum amount of tractive effort.

Traction control will be an advantage in certain appplications such as transfer stations where the loader may be working on slippery concrete.

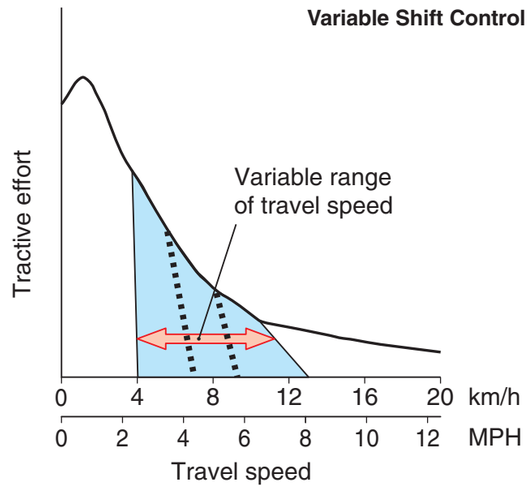

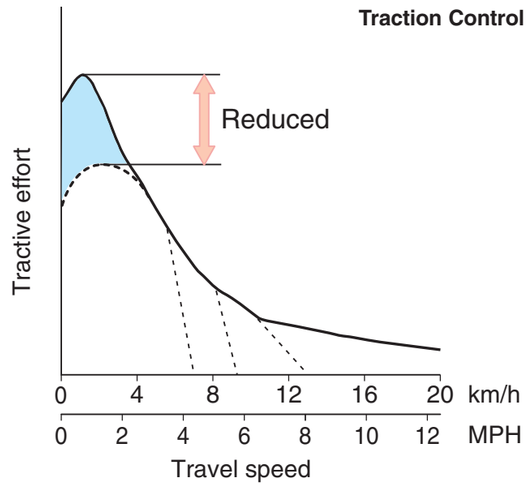

INCREASED RELIABILITY AND SERVICEABILITY

Main Monitor - EMMS (Equipment Management Monitoring System)

Komatsu's new main monitor keeps the operator informed of all machine functions at a glance. The monitor is located behind the steering wheel and displays various different machine functions including fluid/filter change intervals and troubleshooting memory display functions. The main gauges are analog type for easy viewing and other functions utilize light symbols or LCD readouts.

Swing-Out Radiator

The new Komatsu cooling system is isolated from the engine to provide more efficient cooling and low noise. The swing-out hydraulic fan allows the operator to quickly clean out the cooling system. The radiator, air-to-air cooler and oil cooler are mounted side-by-side for more efficient cooling and easy cleaning. A fully-opening, gas spring assisted rear grill gives the operator excellent access to the swing-out fan and coolers.

Full Side-Opening Gull-Wing Engine Doors

Ground level engine service and daily service checks are made easy with the gas spring assisted full side opening gull-wing doors.

Extended Service Interval

Extended engine oil service interval:

250 H ⟶ 500 H

Extended drive shaft greasing interval:

1,000 H ⟶ 4,000 H

Overrun Prevention System

When the machine descends a slope of six degrees or less, maximum travel speed is automatically restricted to approximately **42 km/h** 26 MPH, for safety protection against damage of power train components and brakes by sensing the travel speed and controlling the discharge amount of the HST pump and motor. When the machine descends a steep slope and the travel speed reaches **40 km/h** 25 MPH, the caution lamp lights up to inform the operator to reduce the travel speed.

Note: When the machine descends a steep slope, the use of the service brake is necessary to limit travel speed.

Fully Hydraulic Wet Multi-disc Service Brakes

The dual wet disc brakes at each wheel are fully sealed and adjustment free to reduce contamination, wear and maintenance. The result is lower maintenance costs and higher reliability.

Added dependability is designed into the braking system by the use of two independent hydraulic circuits, providing hydraulic backup should one of the circuits fail.

If the brake oil pressure drops, the warning lamp flashes and the warning buzzer sounds intermittently.

The parking brake is mechanically controlled by a lever in the cab.

Parking Brake

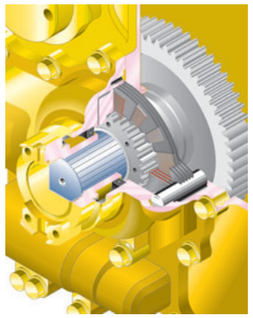

Service Brakes

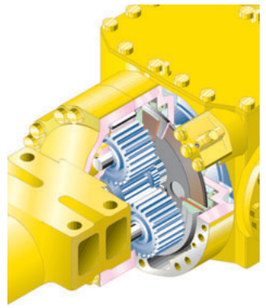

High-rigidity Frames

The front and rear frames along with the loader linkage have high rigidity to withstand repeated twisting and bending loads to the loader body and linkage. Both the upper and lower center pivot bearings use tapered roller bearings for increased durability.The structure is similar to those of large sized loaders and the reinforced loader linkage ensures high strength.

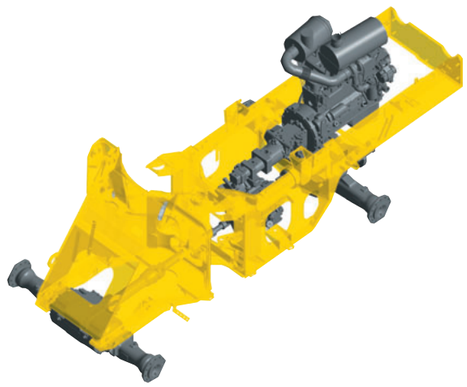

Flat Face-to-Face O-Ring Seals

Flat face-to-face O-ring seals are used to securely seal all hydraulic hose connections and to prevent oil leakage.

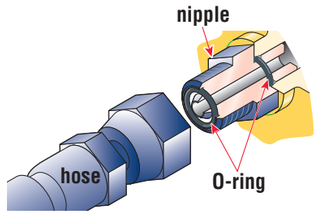

Cylinder Buffer Rings

Buffer rings are installed to the head-side of the hydraulic cylinders to lower the load on the rod seals, prolonging cylinder life by 30% and maximizing overall reliability.

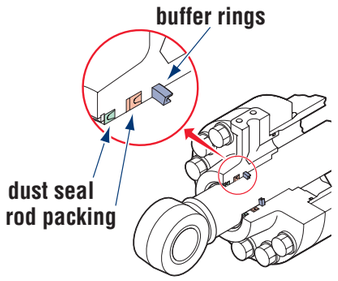

Cathion Electrodeposition Primer Paint/Powder Coating Final Paint

Cathion electrodeposition paint is applied as a primer paint and powder coating is applied as a topcoat to the exterior metal sheet parts. This process results in a durable rust-free machine, even in the most severe environments. Some external parts are made of plastic to provide long life and high impact resistance.

Sealed DT Connectors

Main harnesses and controller connectors are equipped with sealed DT connectors providing high reliability and dust and corrosion resistance.

Komatsu Components

Komatsu manufactures the engine, transfer case, differentials and electric parts on this wheel loader. Komatsu loaders are manufactured with an integrated production system under a strict quality control system.

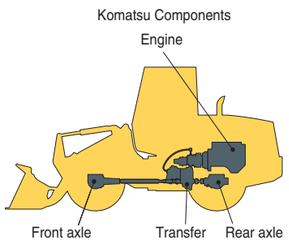

OPERATOR COMFORT

New Cab Layout

Komatsu's new cab layout provides the operator with a roomy, quiet and efficient work environment. The low noise level inside the cab leads the industry at 70 dB(A) and loader controls are ergonomically designed to reduce operator fatigue and increase productivity.

Two Door Walk-Through Cab

Entry and exit into the new Komatsu cab starts with sloped staircase type steps and large diameter handrails for added safety and comfort. The large cab doors are rear-hinged to open 130 degrees offering easy entry/exit and will not hamper visibility when operating the machine with the doors latched open. A wide pillar-less flat glass provides for excellent visibility. The wiper arm covers a large area to provide great visibility even on rainy days.

Low-noise Design

Operator noise: 70 dB(A)

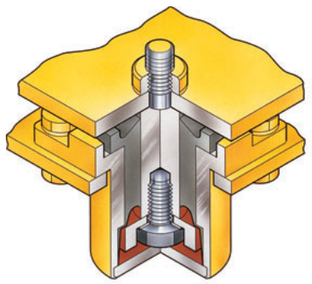

The large cab is mounted with Komatsu's unique ROPS/FOPS viscous mounts. The low-noise engine, hydraulically driven fan, and hydraulic pumps are mounted with rubber cushions, and the cab sealing is improved to provide a quiet, low-vibration, and comfortable operating environment. Pressurization in the cab keeps dirt out further enhancing the operator's comfort.

Easy-to-operate Loader Control lever

A new lever using PPC (Proportional Pressure Control) allows the operator to easily operate the work equipment, to reduce operator fatigue and to increase controllability. The adjustable wrist rest provides the operator with a variety of comfortable operating positions.

Electrically Controlled Directional Lever

The operator can change direction with a touch of his fingers without removing his hand from the steering wheel. Solid state electronics makes this possible.

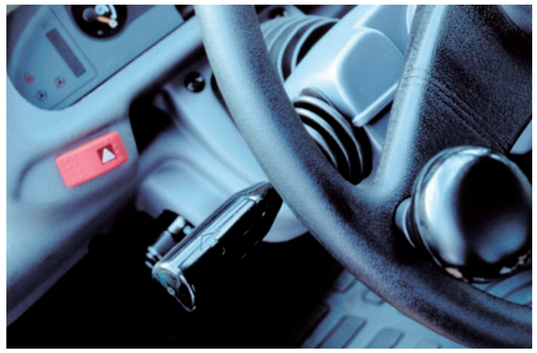

Tiltable Steering Column

The operator can tilt the steering column to allow maximum comfort and control. The two-spoke steering wheel allows maximum visibility of the monitor panel and forward work environment.

Comforts of Home

The large cab allows room for a large lunch box holder, a variety of cup holders and a hot/cold box storage area. Optional air conditioning and the optional AM/FM stereo cassette system create a comfortable and controlled work environment.

SPECIFICATIONS

ENGINE

Model . . . . . Komatsu SAA6D102E-2
Type . . . . . Water-cooled, 4-cycle
Aspiration . . . . . Turbocharged, and air-to-air aftercooled
Number of cylinders 6
Bore x stroke . . . . . **102 mm x 120 mm** 4.02" x 4.72"
Piston displacement . . . . . **5.88 ltr** 359 in³
Governor . . . . . Mechanical, all-speed control
Flywheel horsepower . . . . . **124 kW** 166 HP (SAE J1349)
124 kW 168 PS (DIN 6270)
Rated rpm. . . . . 2000 rpm

Fuel system . . . . . Direct injection
Lubrication system
Method . . . . . Gear pump, force-lubrication
Filter . . . . . Full-flow
Air cleaner. . . . . Dry-type with double radial-sealed elements and dust evacuator, plus dust indicator

TRANSMISSION

Transmission . . . . . Hydrostatic, 1 pump, 2 motors with speed range select

Travel Speed*	Forward		Reverse	
1st**	**4.0 - 13.0 km/h**	2.5 - 8.1 mph	**4.0 - 13.0 km/h**	2.5 - 8.1 mph
2nd	**13.0 km/h**	8.1 mph	**13.0 km/h**	8.1 mph
3rd	**18.0 km/h**	11.2 mph	**18.0 km/h**	11.2 mph
4th	**38.0 km/h**	23.6 mph	**38.0 km/h**	23.6 mph

*Measured with 20.5 - 25 (L3) tires
**1st speed can be set variably

AXLES AND FINAL DRIVES

Drive system. . . . . Four-wheel drive
Front. . . . . Fixed, semi-floating
Rear. . . . . Center-pin support, semi-floating 30° total oscillation
Reduction gear. . . . . Spiral bevel gear
Differential gear . . . . . Torque proportioning
Final reduction gear . . . . . Planetary gear, single reduction

BRAKES

Service brakes: Hydraulically-actuated, wet disc brakes actuate on four wheels.

Parking brake: Wet, multi-disc brake on transfer output shaft.

Emergency brake: Parking brake is commonly used.

STEERING SYSTEM

Type . . . . . Full-hydraulic power steering independent of engine rpm
Steering angle . . . . . 40° each direction
Minimum turning radius at the center of outside tire . . . . . **5160 mm** 16'11"

BUCKET CONTROLS

The use of a PPC hydraulic control valve offers lighter operating effort for the work equipment control levers. The reduction in the lever effort and travel makes it easy to operate in the work environment.

Control positions

Boom. . . . . Raise, hold, lower, and float
Bucket . . . . . Tilt-back, hold, and dump

HYDRAULIC SYSTEM

Capacity (discharge flow) @ engine-rated rpm
Maximum flow for loader circuit
Loader + steering pump . . **61 + 172 ltr/min** 16.1 + 45.4 U.S. gal/min
Pilot pump . . . . . **54 ltr/min** 14.3 U.S. gal/min
(Gear-type pumps)

Relief valve setting
Loader . . . . . **210 kg/cm²** 20.6 MPa 3,000 psi
Steering . . . . . **210 kg/cm²** 20.6 MPa 3,000 psi

Control valve
2-spool open center type

Hydraulic cylinders
Loader and steering . . . . . Double-acting, piston

Hydraulic Cylinders	Number of Cylinders	Bore		Stroke	
Boom	2	**140 mm**	5.5"	**740 mm**	29.1"
Bucket	1	**160 mm**	6.3"	**532 mm**	20.9"
Steering	2	**70 mm**	2.8"	**453 mm**	17.8"

Hydraulic cycle time (rated load in bucket)
Raise. . . . . 6.1 sec
Dump . . . . . 1.2 sec
Lower (empty) . . . . . 3.3 sec

Total cycle time . . . . . 10.6 sec

SERVICE REFILL CAPACITIES

Cooling system. . . . . **18.5 ltr** 4.9 U.S. gal
Fuel tank . . . . . **228.0 ltr** 60.2 U.S. gal
Engine . . . . . **19.5 ltr** 5.2 U.S. gal
Hydraulic system . . . . . **89.0 ltr** 23.5 U.S. gal
Axle (each, front and rear). . . . . **24.0 ltr** 6.3 U.S. gal
Transmission . . . . . **6.5 ltr** 1.7 U.S. gal

BUCKET SELECTION GUIDE

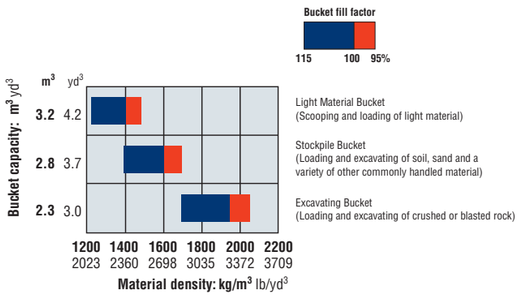

DIMENSIONS

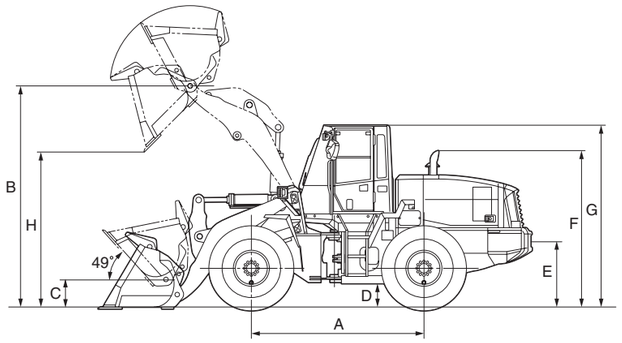

	Tread	**2050 mm**	6'9"
	Width over tires	**2585 mm**	8'6"
A	Wheelbase	**3030 mm**	9'11"
B	Hinge pin height at max. height	**3905 mm**	12'10"
C	Hinge pin height at carry position	**480 mm**	1'7"
D	Ground clearance	**425 mm**	1'5"
E	Hitch height	**1095 mm**	3'7"
F	Overall height, top of stack	**2775 mm**	9'1"
G	Overall height, ROPS cab	**3200 mm**	10'6"
H	See Dumping Clearance Below		

Measured with 20.5-25-12PR (L3) tires

Bucket		Stockpile Bucket With Bolt-On Cutting Edge		Excavating Bucket With Bolt-On Cutting Edge		Light Material Bucket With Bolt-On Cutting Edge	
Bucket Capacity	Heaped	**2.8 m³**	3.7 yd³	**2.3 m³**	3.0 yd³	**3.2 m³**	4.2 yd³
	Struck	**2.4 m³**	3.1 yd³	**2.0 m³**	2.6 yd³	**2.8 m³**	3.7 yd³
Bucket Width		**2740 mm**	9'0"	**2740 mm**	9'0"	**2740 mm**	9'0"
Bucket Weight		**1240kg**	2,734 lb	**1330 kg**	2,932 lb	**1430 kg**	3,153 lb
Static Tipping Load	Straight	**11250 kg**	24,802 lb	**11160 kg**	24,604 lb	**11060 kg**	24,383 lb
	40° full turn	**9800 kg**	21,605 lb	**9720 kg**	21,429 lb	**9630 kg**	21,230 lb
Dumping Clearance, maximum height and 45° dump angle (H)**		**2850 mm**	9'4"	**2955 mm**	9'8"	**2715 mm**	8'11"
Reach at 2130 mm 7' 45° dump angle**		**1570 mm**	5'2"	**1675 mm**	5'6"	**1435 mm**	4'8"
Reach at maximum height and 45° dump angle**		**1035 mm**	3'5"	**930 mm**	3'1"	**1170 mm**	3'10"
Reach with arm horizontal and bucket level**		**2420 mm**	7'11"	**2275 mm**	7'6"	**2610 mm**	8'7"
Operating Height Fully raised		**5330 mm**	17'6"	**5145 mm**	16'11"	**5415 mm**	17'9"
Overall Length	Bucket on Ground	**7455 mm**	24'6"	**7310 mm**	24'0"	**7645 mm**	25'1"
Turning Radius*		**6090 mm**	20'0"	**6030 mm**	19'9"	**6165 mm**	20'2"
Digging Depth	0°	**85 mm**	3.3"	**85 mm**	3.3"	**85 mm**	3.3"
	10°	**296 mm**	11.7"	**275 mm**	10.8"	**322 mm**	12.7"
Breakout Force		**13180 kg**	29,057 lb	**15100 kg**	33,290 lb	**11280 kg**	24,868 lb
Operating Weight		**13520 kg**	29,806 lb	**13610 kg**	30,005 lb	**13710 kg**	30,225 lb

* Bucket at carry, outside corner of bucket. **At the end of tooth or B.O.C.

All dimensions, weights, and performance values based on SAE J732c and J742b standards. Static tipping load and operating weight shown include lubricant, coolant, full fuel tank, ROPS cab, additional counterweight and operator. Machine stability and operating weight affected by counterweight, tire size, and other attachments.

Weight Changes

	Change in Operating Weight		Change in Tipping Load Straight		Change in Tipping Load Full Turn		Width Over Tire		Ground Clearance		Change in Vertical Dimensions	
20.5-25-12PR (L2)	**–160 kg**	–353 lb	**–120 kg**	–265 lb	**–104 kg**	–229 lb	**2585 mm**	8'6"	**425 mm**	1'5"	**0 mm**	0"
Install ROPS canopy (instead of cab)	**–150 kg**	–331 lb	**–107 kg**	–236 lb	**–93 kg**	–205 lb						
Additional counterweight	**520 kg**	1,146 lb	**1010 kg**	2,227 lb	**880 kg**	1,940 lb						
Air conditioner	**70 kg**	154 lb	**90 kg**	198 lb	**80 kg**	176 lb						

STANDARD EQUIPMENT

- Alternator, 35A, 24 volt
- Automatic boom kickout
- Axles, semi floating with torque proportioning
- Back-up alarm
- Back-up light, rear
- Batteries, **112 Ah**/2 x 12 V
- Bucket positioner, automatic
- Cab (ROPS/FOPS) with adjustable wrist rest, cigarette lighter/ash tray, dome light, front (intermittent) wiper/washer, rear view mirrors (2 outside, 1 inside), right hand and left hand door access with steps, sun visor
- Counterweight
- Differentials, torque proportioning
- EMMS (Equipment Management Monitoring System)
  —Gauges (Speedometer, engine water temperature, fuel level, HST oil temperature)
  —LCD displays (filter/oil replacement time, HST selection, odometer, service meter, trouble shooting)
  —Lights (Axle oil temperature, battery charge, brake oil pressure, central warning, directional indicator, engine oil pressure, engine pre-heater, HST oil filter clogging, high beam, maintenance, parking brake reminder, parking brake warning, steering oil pressure, transmission speed range, turn signals)
- Engine, Komatsu SAA6D102E-2
- Engine shut-off system, electric
- Engine water separator
- Fan, hydraulic driven, swing out
- Hard water area arrangement
- Horn, electric
- Lift cylinders and bucket cylinder
- Lifting eyes
- Lights
  —Stop and tail
  —Turn signal (2 front, 2 rear)
  —Working (2 front, 2 rear, 2 outside cab)
- Loader linkage with standard lift boom
- Maintenance monitor panel
- Parking brake, wet disc
- PPC fingertip control, two levers
- Radiator mask, hinged
- Seat belt, 3" wide
- Seat, vinyl, suspension, reclining
- Service brakes, hydraulic, wet multi-disc, inboard
- Starting aid, intake manifold preheater
- Starting motor, **5.5 kW**/24 V
- Steering wheel, tiltable
- Tires 20.5-25-12PR (L3), tubeless and rims
- Transmission (Hydrostatic with speed range select), automatic
- Transmission control, electric, steering column
- 2-spool valve for boom and bucket controls with PPC

OPTIONAL EQUIPMENT

- Air conditioner with heater/defroster/pressurizer
- Auxiliary steering
- Bucket, excavating, **2.3 m³** 3.0 yd³
- Bucket, stockpile, **2.8 m³** 3.7 yd³
- Bucket, light material, **3.2 m³** 4.2 yd³
- Bucket teeth, bolt-on
- Cold area arrangement
- Counterweight, additional
- Cutting edge, bolt-on, reversible
- ECSS (Electronically Controlled Suspension System)
- Fenders, front
- Fenders, rear full
- Fire extinguisher
- Floor mat
- Heater and defroster
- High-lift boom arrangement
- Hydraulic adapter kit (3rd spool), includes valve, lever, and piping
- Limited-slip differential, front and rear
- Power train guard
- Pre-cleaner
- Radio, AM/FM stereo with cassette
- Remote grease
- Rims only, less tires
  —Fits 20.5-25 tires
- ROPS canopy
- Seat, fabric, suspension, reclining
- Tool kit
- 3-spool valve, lever, piping
- Tires (bias ply)
  —20.5-25-12PR (L2)
- Vandalism protection kit

www.Komatsu.com

Printed in Japan 200809 IP.As(05)

KOMATSU®

CEN00356-00

Materials and specifications are subject to change without notice.
KOMATSU is a trademark of Komatsu Ltd. Japan.